K.R. MANGALAM UNIVERSITY

THE COMPLETE WORLD OF EDUCATION

ASSIGNMENT-2

School of Engineering and Technology

Course Code & Name: ENCS304 Computer Networks

Program Name: B.Tech CSE

Name: N. Yugesh

Roll Number: 2301010199

Course: BTech CSE – C

Packet Flow Visualization Using Simulation Mode

Experiment Objectives:

Students will use Packet Tracer Simulation Mode to observe how packets move between devices, how switches learn MAC addresses, and how ICMP echo request/reply travels through a small network.

Learning Outcomes

- Use Simulation Mode effectively
- Observe ARP + ICMP behavior
- Understand switch MAC learning behavior
- Interpret packet event list timeline

Concepts Used

- Simulation Mode
- ICMP ping
- ARP resolution
- Switch MAC address table learning

Objective

The objective of this experiment is to understand how packets travel across a network using Simulation Mode in Cisco Packet Tracer. It also demonstrates ARP resolution, ICMP communication, and how switches learn MAC addresses.

Task 1: Building a Simple LAN

A simple Local Area Network (LAN) was created using:

- 1 Switch
- 3 PCs

IP Configuration

- PC1 → 192.168.20.1 /24
- PC2 → 192.168.20.2 /24
- PC3 → 192.168.20.3 /24

All devices were connected to the switch using straight-through cables.

Task 2: First Ping Observation (PC1 → PC2)

Simulation Mode was enabled and a ping was sent from PC1 to PC2.

Observed Behavior

1. ARP Request

    - PC1 did not know the MAC address of PC2.
    - It sent an ARP Request (broadcast) to all devices in the network.
    - The switch forwarded this broadcast frame to all ports except the source port.
2. ARP Reply
    - PC2 responded with its MAC address using an ARP Reply (unicast) to PC1.
    - The switch forwarded this reply directly to PC1.
3. ICMP Echo Request
    - After ARP resolution, PC1 sent an ICMP Echo Request (ping) to PC2.
4. ICMP Echo Reply
    - PC2 responded with an ICMP Echo Reply.
    - Communication was successfully completed.

Switch Behavior

- The switch learned MAC addresses by observing incoming frames.
- It stored:
    - PC1 MAC → Port X
    - PC2 MAC → Port Y

<u>Task 3</u>: Second Ping Observation (PC1 → PC2)

A second ping was sent from PC1 to PC2.

Observed Behavior

- No ARP request was generated.
- Only:

    - ICMP Echo Request
    - ICMP Echo Reply

Reason

- PC1 already had PC2's MAC address stored in its ARP cache.
- The switch also had MAC entries in its MAC address table.

Conclusion

- The second ping was faster and involved fewer packets.

Task 4: MAC Address Table Observation

The switch MAC address table was checked (or inferred through simulation events).

Observations

- The switch dynamically learned MAC addresses of connected PCs.
- Entries included:
    - MAC address of PC1 mapped to its port
    - MAC address of PC2 mapped to its port

Learning Mechanism

- When a frame arrives, the switch records:
    - Source MAC address
    - Incoming port

Screenshots

Setup

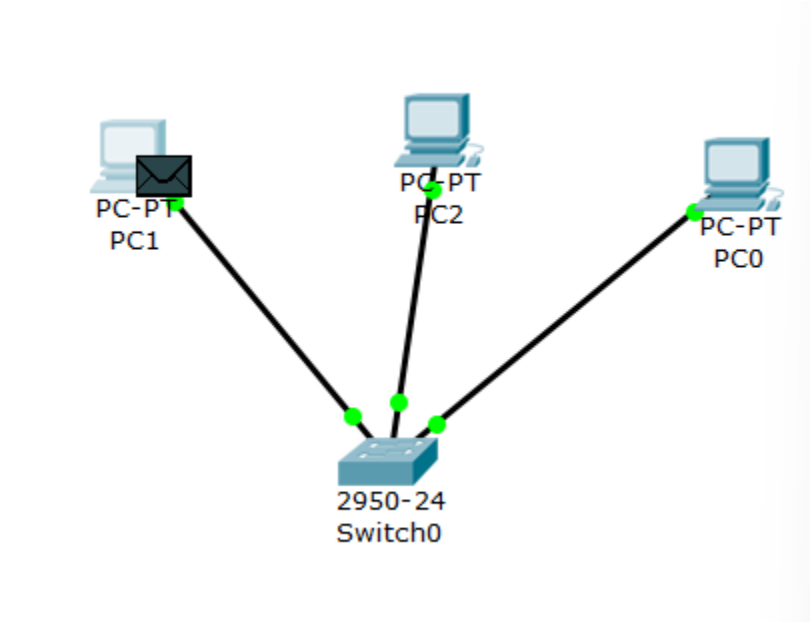

Ping

```
PC>ping 192.168.0.2

Pinging 192.168.0.2 with 32 bytes of data:
```

transmission chronology

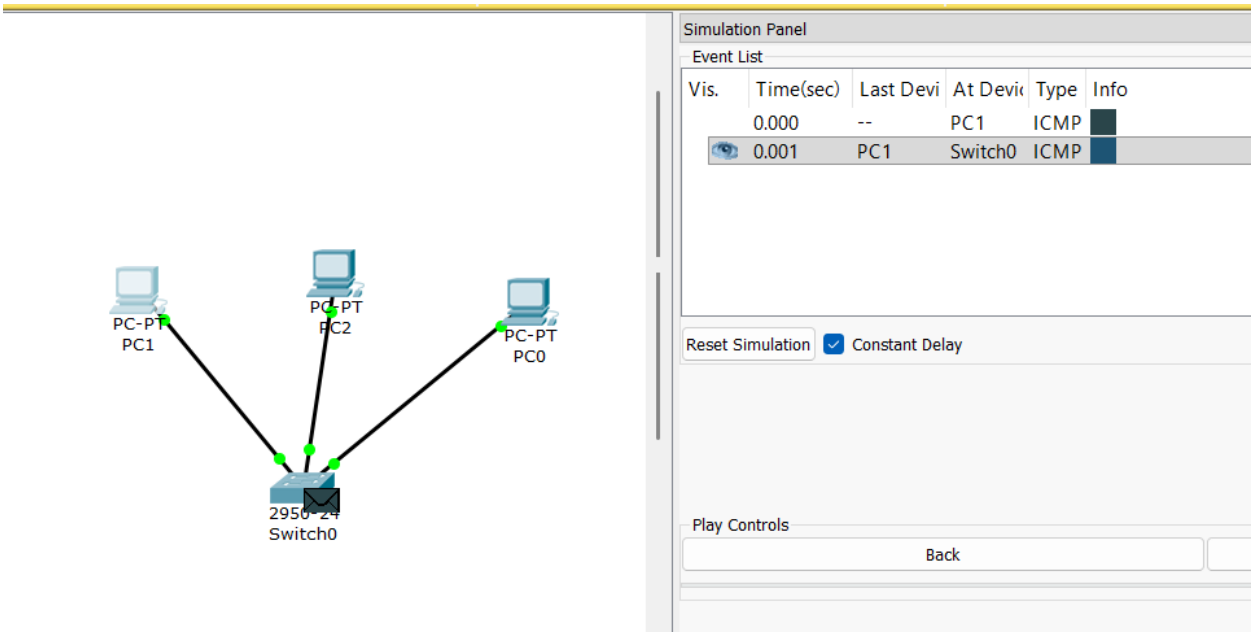

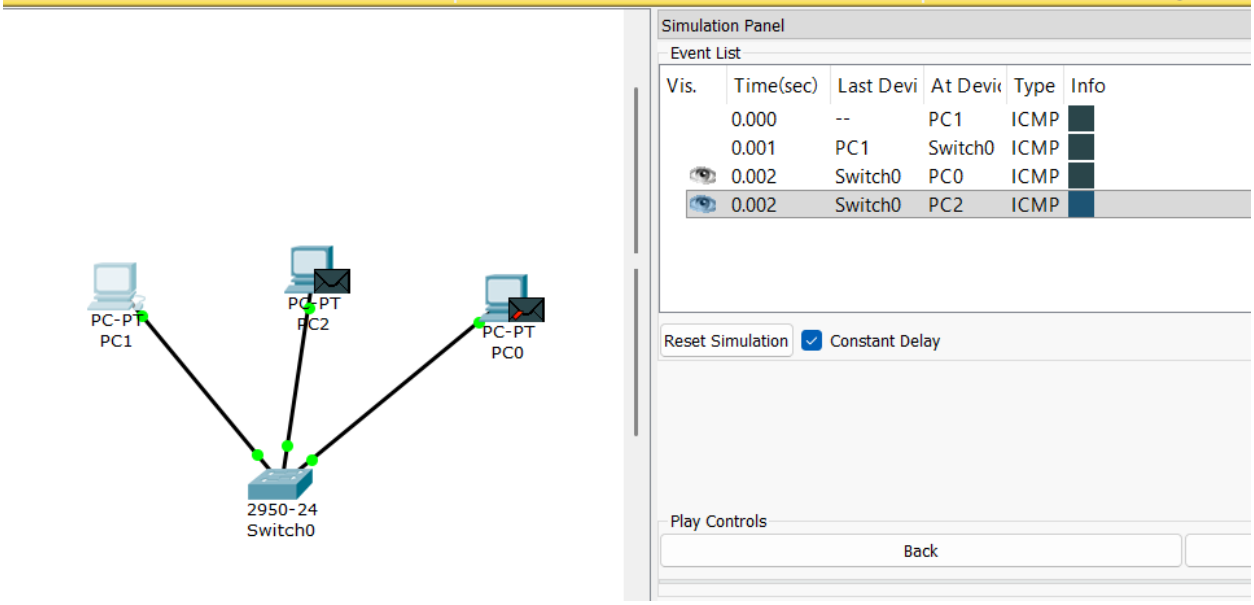

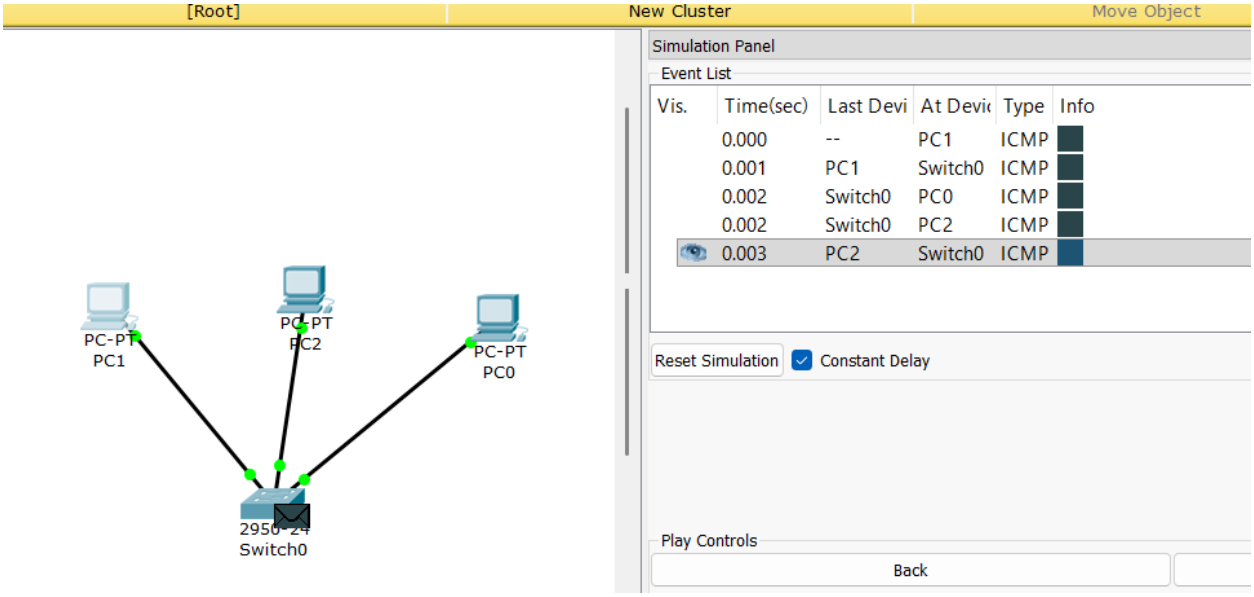

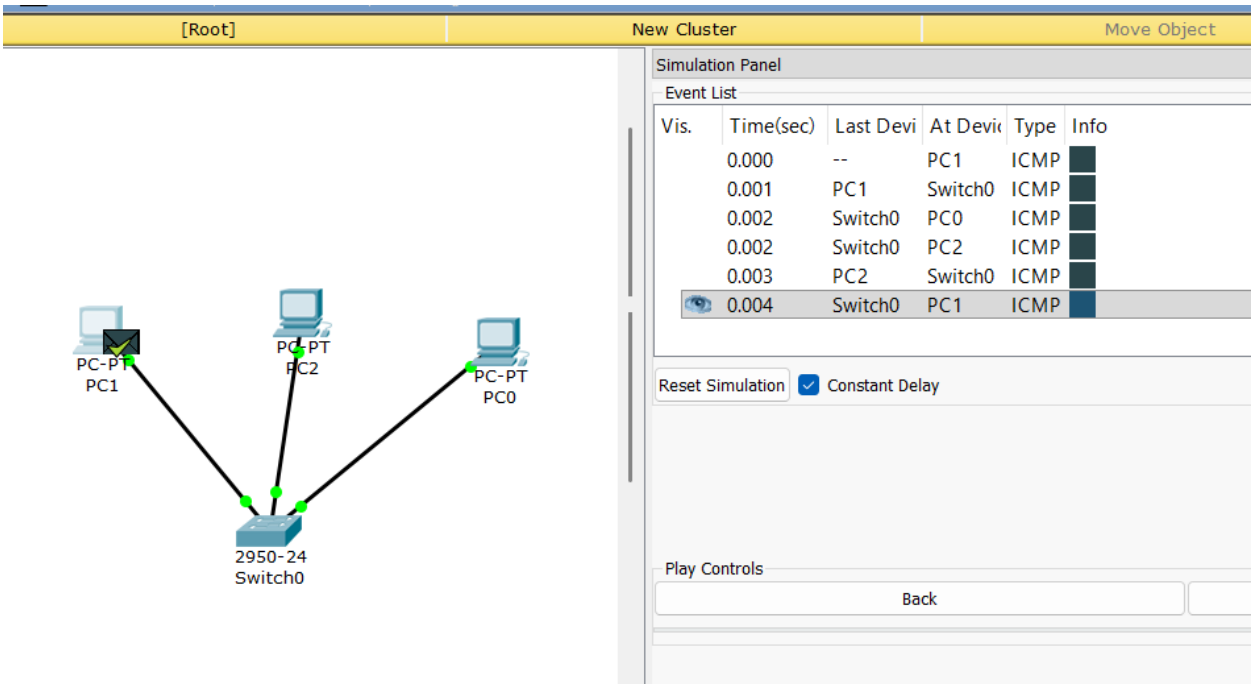

Packet received

```
PC>ping 192.168.0.2

Pinging 192.168.0.2 with 32 bytes of data:

Reply from 192.168.0.2: bytes=32 time=4ms TTL=128
```

Sending packet again after caching

```
PC>ping 192.168.0.2

Pinging 192.168.0.2 with 32 bytes of data:

Reply from 192.168.0.2: bytes=32 time=4ms TTL=128

Ping statistics for 192.168.0.2:
    Packets: Sent = 1, Received = 1, Lost = 0 (0% loss),
Approximate round trip times in milli-seconds:
    Minimum = 4ms, Maximum = 4ms, Average = 4ms

Control-C
^C
PC>ping 192.168.0.2

Pinging 192.168.0.2 with 32 bytes of data:
```

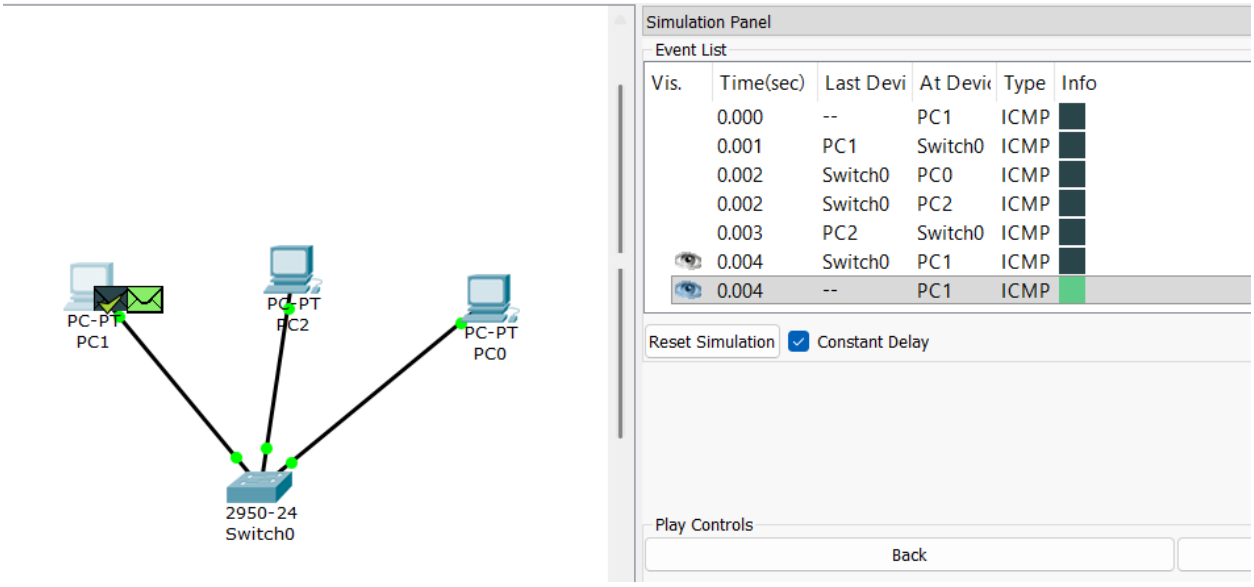

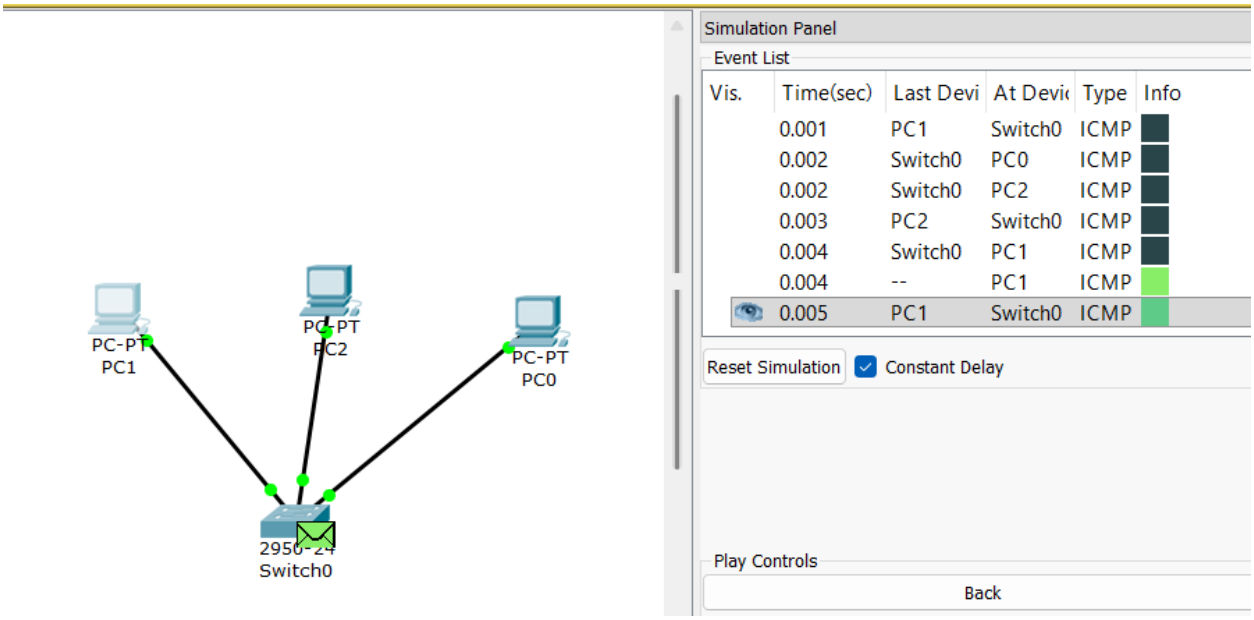
PC-PT
PC1
PC-PT
PC2
PC-PT
PC0
2950-24
Switch0
Simulation Panel
Event List
Vis. Time(sec) Last Devi At Devi Type Info
0.001 PC1 Switch0 ICMP
0.002 Switch0 PC0 ICMP
0.002 Switch0 PC2 ICMP
0.003 PC2 Switch0 ICMP
0.004 Switch0 PC1 ICMP
0.004 -- PC1 ICMP
0.005 PC1 Switch0 ICMP
Reset Simulation
Constant Delay
Play Controls
Back

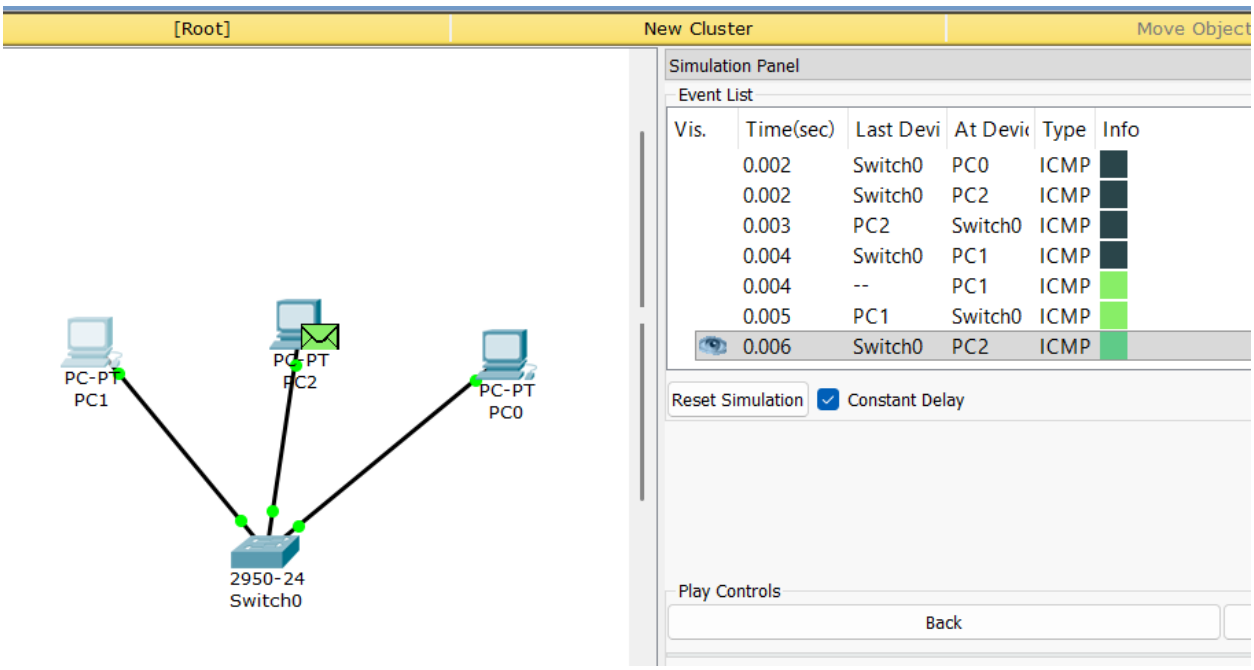
[Root]
New Cluster
Move Object
PC-PT
PC1
PC-PT
PC2
PC-PT
PC0
2950-24
Switch0
Simulation Panel
Event List
Vis. Time(sec) Last Devi At Devi Type Info
0.002 Switch0 PC0 ICMP
0.002 Switch0 PC2 ICMP
0.003 PC2 Switch0 ICMP
0.004 Switch0 PC1 ICMP
0.004 -- PC1 ICMP
0.005 PC1 Switch0 ICMP
0.006 Switch0 PC2 ICMP
Reset Simulation
Constant Delay
Play Controls
Back

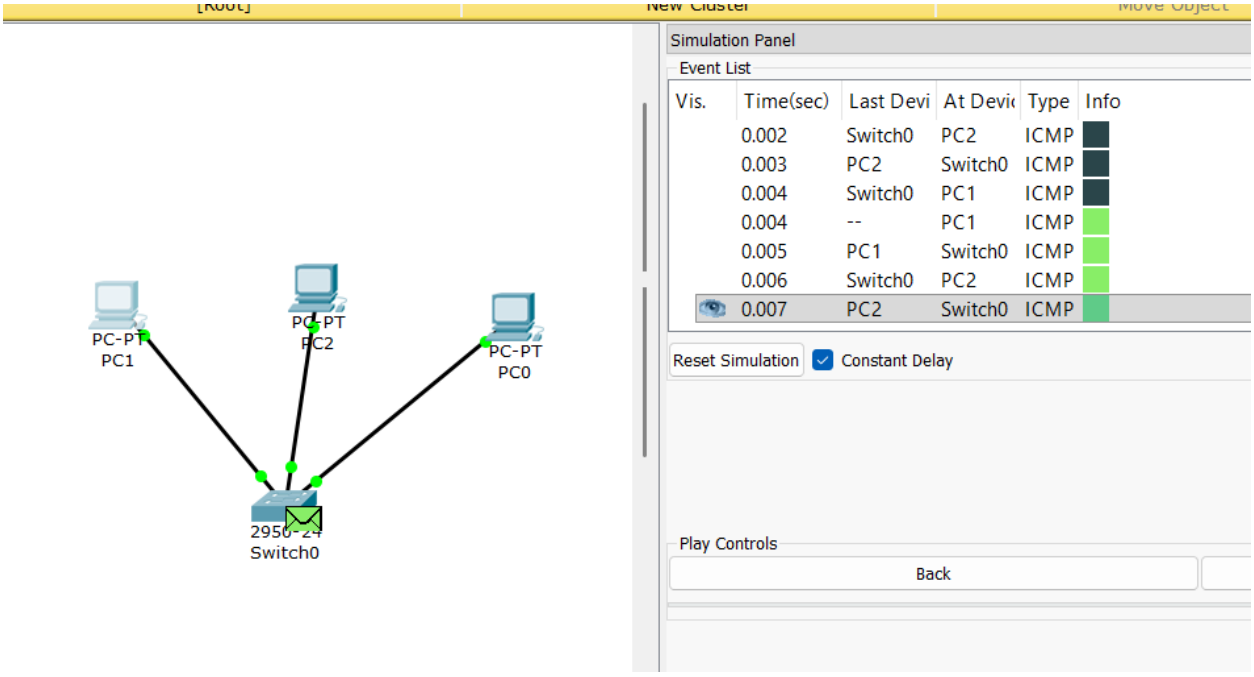

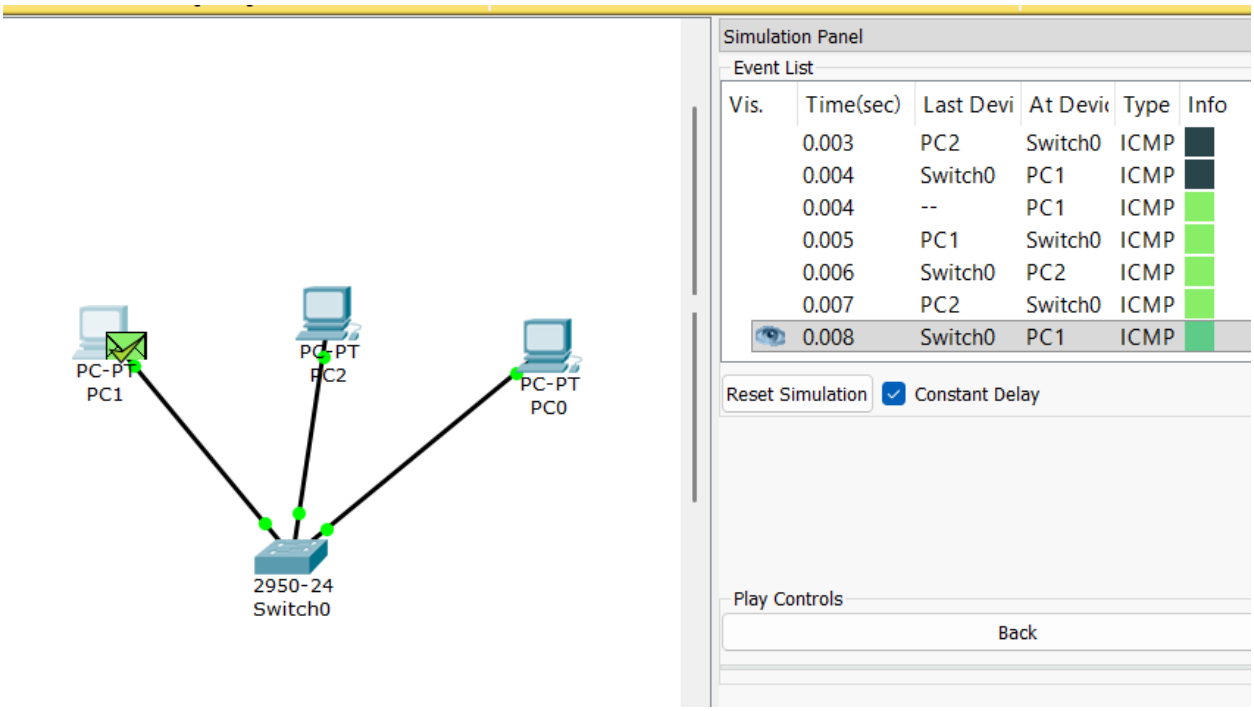


```
^C
PC>ping 192.168.0.2

Pinging 192.168.0.2 with 32 bytes of data:

Reply from 192.168.0.2: bytes=32 time=4ms TTL=128
```

Packet received

Switch table (after caching)

```
Switch#show mac address-table
          Mac Address Table
-------------------------------------------

Vlan    Mac Address       Type        Ports
----    -----------       --------    -----

   1    0090.0cc7.4992    DYNAMIC     Fa0/3
   1    00d0.ffbd.0c8a    DYNAMIC     Fa0/2
Switch#
```